ISSN 2395-1621

Thermal analysis of helical coil heat exchanger by wilson Plot method

#1Mr. Narayan. D. More, #2Prof.L. V. Kamble

1narayan.more1@gmail.com
2klaxmanv@rediffmail.com

#1 P.G. Student of G. S. Moze COE, Balewadi., Pune,Maharashtra,India- 411045

#2 HOD, Siddhant C.O.E., Pune, Maharashtra, India- 412109

ABSTRACT

In the present study, the heat transfer coefficients of shell and helically coiled tube heat exchangers were investigated experimentally. Three heat exchangers with different coil pitches were selected as test section for counter-flow configurations. All the required parameters like inlet and outlet temperatures of tube-side and shell-side fluids, flow rate of fluids, etc. were measured using appropriate instruments. Totally, 75 test runs were performed from which the tube-side and shell-side heat transfer coefficients were calculated. The calculated heat transfer coefficients of tube-side were also compared to the existing correlations for other boundary conditions and a reasonable agreement was observed. the results show that heat transfer rate increases with increasing coil pitch.

***Keywords*— helically coiled tube, Reynolds no. Nusselt no., heat transfer coefficient**

ARTICLE INFO

Article History

Received :18th November 2015

Received in revised form : 19th November 2015

Accepted : 21st November , 2015

Published online :

22nd November 2015

I. INTRODUCTION

Heat exchangers are used in a wide variety of applications including power plants, nuclear reactors, refrigeration and air conditioning systems, automotive industries, heat recovery systems, chemical processing, and food industries [1–3]. Besides the performance of the heat exchanger being improved, the heat transfer enhancement enables the size of the heat exchanger tobe considerably decreased. In general, the enhancement techniques can be divided into two groups: active and passive techniques. The active techniques require external forces like fluid vibration, electric field, and surface vibration. The passive techniques require special surface geometries or fluid additives like various tube inserts. Both techniques have been widely used to improve heat transfer performance of heat exchangers. Due to their compact structure and high heat transfer coefficient, helically coiled tubes have been introduced as one of the passive heat transfer enhancement techniques and are widely used in various industrial applications. Several studies have indicated that helically coiled tubes are superior to straight tubes when employed in heat transfer applications [4,5]. The centrifugal force due to the curvature of the tube results in the secondary flow development which enhances the heat transfer rate. This phenomenon can be beneficial especially in laminar flow regime. Thermal performance and pressure drop of a shell and helically coiled tube heat exchanger with and without helical crimped fins have been investigated by Naphon[6]

Naphon and Wongwises[7]provided a literature review on heat transfer and flow characteristics of single-phase and two-phase flow in curved tubes including helically coiled tubes and spirally coiled tubes. The majority of the studies related to helically coiled tubes and heat exchangers have dealt with two major boundary conditions, i.e. constant heat flux and constant wall temperature[8,9]. However, these boundary conditions are not encountered

in most single-phase heat exchangers. Rennie[10] studied the double-pipe helical heat exchangers numerically and experimentally neglecting the effect of coiled tube pitch. Though the boundary condition of his work was different from the conventional boundary conditions of constant wall temperature and constant heat flux, however, it is obvious that the geometry of the double-pipe coiled tube heat exchanger is completely different from that of shell and coiled tube heat exchanger of the present work. Kumar et al. [11] studied a tube-in-tube helically coiled heat exchanger for turbulent flow regime numerically. Numerical investigations were done to understand forced laminar fluid flow in rectangular coiled pipes with circular cross-section by Conte´ and Peng[12]. Their focus was addressed one exploring the flow pattern and temperature distribution through the pipe. One of the most frequent uses of helically coiled tubes is in shell and coiled tube heat exchangers. Going through the existing literature, it was revealed that there are a few investigations on the heat transfer coefficients of this kind of heat exchangers considering the geometrical effects like coil pitch. Also, this scarcity is more prominent for shell-side heat transfer coefficients.

NOMENCLATURE

A surface of coiled tube, m^2
B pitch(mm)
d_i inner Diameter (mm)
d_o Outer Diameter (mm)
D Mean Coil Diameter (mm)
H Convective heat transfer coefficient
K Thermal conductivity ($W/m^2\,^oC$)
LMTD Log Mean Temperature Difference
LPH Litre per Hour
Nu Nusselt Number
Re Reynolds Number
Pr Prandtlnumber $=\mu C_p/K$
Q Heat Transfer(watt)
U_o Overall heat transfer coefficient $W/m^2\,^oC$
V Fluid velocity (m/sec)

Greek Letter

μ Viscosity
δ Curvature ratio
γ Dimensional pitch
ρ Density

Subscripts

i Inner side
o Outer side

II. GEOMETRY OF SHELL AND COILED TUBE HEAT EXCHANGER

A typical shell and coiled tube heat exchanger is shown in Fig. 1.In this figure, d is the diameter of the coiled tube, R_c is the curvature radius of the coil, D is the inner diameter of shell, and b is the coil pitch. The curvature ratio, d, is defined as the coil-to-tube diameter ratio, $d/2R_c$, and the non-dimensional pitch, c, is defined as $b/2pR_c$.

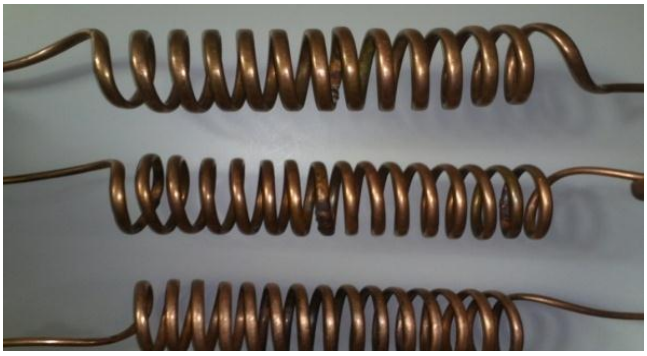

The other four important dimensionless parameters of coiled tube namely, Reynolds number (Re_i), Nusselt number (Nu_i), Dean number (De), and Helical number (He) are defined as follow:

$Re_i = \frac{\rho v d_i}{\mu}$, $Nu_i = \frac{h_i d_i}{K}$

Dean number (De) = Rex δ

De = Re x $(d_i / 2Rc)^{0.5}$ $\delta = (d_i/2Rc)$

De = Re x $\delta^{0.5}$

Helical Number (He) = $[De / (1+\gamma^2)^{0.5}$

Table1: Dimensions of shell and coiled tube heat exchangers

Heat Exchanger	d_i (mm)	d_o (mm)	D_m (mm)	b (mm)	δ	Coil length (mm)
1	7	8	78	17	0.09615	290
2	7	8	78	21	0.09615	310
3	8.3	9.8	80	24	0.11312	325

III.EXPERIMENTAL SETUP

The schematic diagram of experimental set-up is shown in Fig. 1. The set-up is a well instrumented single-phase heat exchanging system in which a hot water stream flowing inside the tube-side is cooled by a cold water stream flowing in the shell-side. The main parts of the cycle are coiled tube heat exchanger (1-3), centrifugal pump (6), storage tank , and heater (7). The heat exchangers include a copper coiled tube and an insulated shell. The dimensions of the heat exchangers are depicted in Table 1. The water of storage tank is heated using an electric heater (3000 watt). Reaching to a prescribed temperature, pump is started to circulate the hot water in the cycle. A ball valve and a globe valve are used to control the flow rate of coolant water and hot water, respectively. To measure the flow rate of the cold stream a rota meter with the accuracy of $2.78x10^{-4}$ kg/s is installed upstream of the heat exchanger while for the hot stream ameasuring pot with the accuracy of $3.3x10^{-3}$ kg/s is used. The inlet and outlet temperatures of hot and cold water were recorded manually using thermometers inserted in the small holes made in the inlet and outlet tubes of each heat exchanger and sealed to prevent any leakage. Also, all the pipes and connections between the temperature measuring stations and heat exchanger were properly insulated. To avoid heat losses we insulated the shell as well as hot pipe by wounding asbestos rope of 3mm diameter. All the temperatures were measured steady state condition in the time steps of 10 min, and the average values were used for further analysis..All the tube- and shell-side fluids properties

were assessed at the mean temperature of the fluids (average of inlet and outlet temperatures).

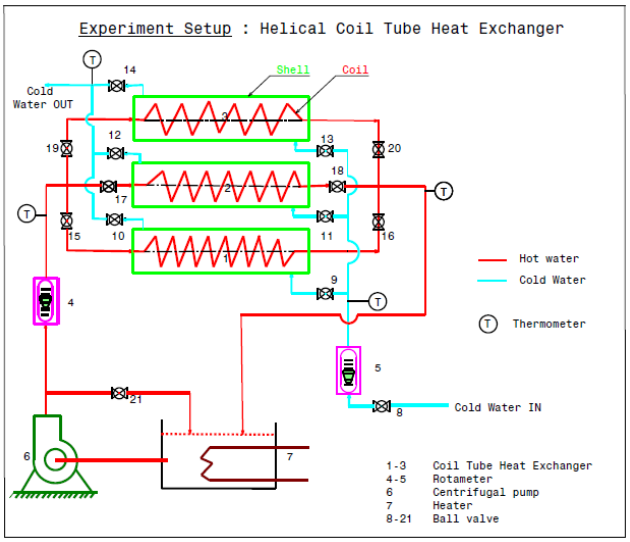

Fig. No.1 Experimental Setup

IV.DATA COLLECTION & ANALYSIS

The range of operating parameters is given in Table 2. As is seen from this table, a wide range of flow rates both in the tube-side and shell-side is covered for counter-flow configurations. The tests were performed for all three coiled tube heat exchangers which resulted in a total 75 test runs.

Table 2.*Range of operating parameters*

Sr.No.	Parameter	Range
1	Tube side water flow	10-42LPH
2	Shell side water flow	20-40LPH
3	Tube side water inlet Temperature	41-51^{0}c
4	Tube side water outlet Temperature	35-45^{0}c
5	Shell side water inlet Temperature	26-33^{0}c
6	Shell side water outlet Temperature	35-40^{0}c

Heat transfer coefficients for the shell-side, h_o, and for the coiled tube-side, h_i, were calculated using ‘‘Wilson plots” as described by Rose [13]. Using Wilson plots, the heat transfer coefficients can be calculated based on the overall temperature difference and the rate of heat transfer. As there is no need for measuring the tube wall temperature in this method, it was chosen to avoid the disturbance of flow patterns and heat transfer while attempting to measure wall temperatures. In this work, the flow in the coiled tube was kept constant and the flow in the shell-side was varied for the five different flow rates. The overall heat transfer coefficient can be The range of operating parameters is given in Table 2. As is seen from this table, a wide range of flow rates both in the tube-side and shell-side is covered for counter-flow configurations. The tests were performed for all three coiled tube heat exchangers which resulted in a total 75 test runs.

In this work, the flow in the coiled tube was kept constant and the flow in the shell-side was varied for the five different flow rates. The overall heat transfer coefficient can be where di and do are inner and outer diameters of the tube, respectively; k is the thermal conductivity of the wall; and L is the length of the heat exchanger. After calculating the overall heat transfer coefficients, the only unknown variables in

$$\frac{1}{U_0} = \frac{A_0}{A_i h_i} + \frac{A_0 \ln\left(\frac{d_0}{d_i}\right)}{2\pi KL} + \frac{1}{h_0} \quad (1)$$

Eq. (1) are the heat transfer coefficients. By keeping the mass flow rate in the inner tube constant, it is then assumed that the inner heat transfer coefficient is constant. The outer heat transfer coefficient is assumed to behave in the following manner with the fluid velocity in the shell, v_0:

$$h_0 = C v_0^n \quad (2)$$

Substituting Eq. (2) into Eq. (1), the values for the constant, C, and the exponent, n, were determined through curve fitting. The inner and outer heat transfer coefficients could then be calculated. This procedure was repeated for each inner flow rate, coil size, and configuration. This resulted in 15 Wilson plots, and 15 inner heat transfer coefficients. For each Wilson plot, five outer heat transfer coefficients were calculated, i.e. totally 75 outer heat transfer coefficients were calculated.The uncertainty analysis was performed by the method proposed by Schultz and Cole [15]for all experiments, and it was found that the expected experimental error was within ±8% for all the runs.

Fig 2.Graph 1 Wilson plot

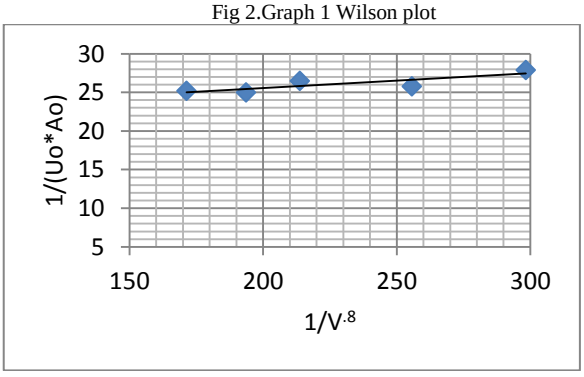

V.RESULT & DISCUSSION

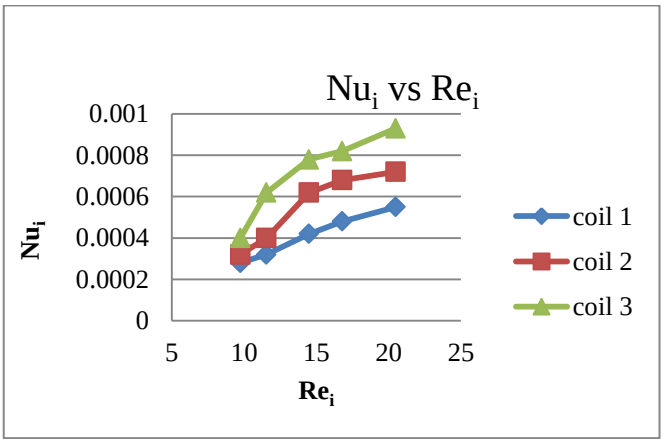

Fig.3 Nusselt number versus Reynolds number inner side

Fig. 3 represents the tube-side Nusselt number versus Reynolds number for shell and coiled tube heat exchangers with differentcoil pitches. This figure also illustrates a comparison between theresults of this study [8] for boundary conditions of constant heat flux and constant walltemperature. In this figure, for constant wall temperatureand constant heat flux boundary conditions proposed bythe shell-side Nusselt numbers increase with Reynolds number.Also, it appears that the increase of coiled tube pitch leads to highervalues of shell-side Nusselt number. This may be explained as insmaller coil pitches, the coolant water is confined in the space betweenthe successive coil rounds and a semi-dead zone is formed.As in this region, the flow of shell-side fluid is decelerated; heattransfer coefficients will be descended. Also, it can be easily seenthat the difference among the coils with different geometries aremore severe in high Reynolds number region; i.e. when the shellsideReynolds number is increased choosing the appropriate coiledtube geometry becomes more critical.

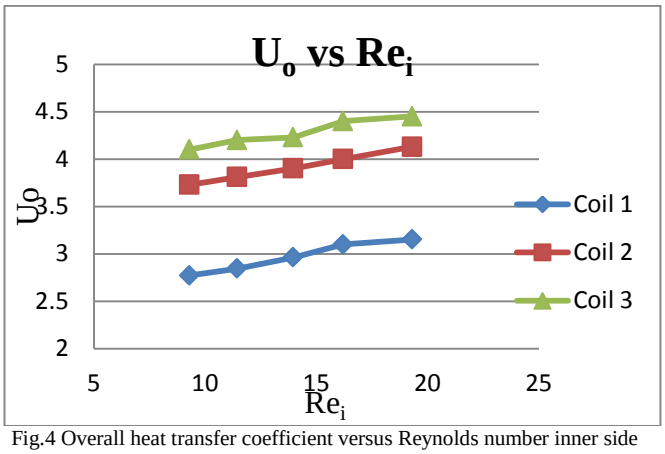

Fig.4 Overall heat transfer coefficient versus Reynolds number inner side

Fig. 4represents the shell-side Nusselt numbers increase with overall heat transfer coefficient .Also, it appears that the increase of coiled tube pitch leads to highervalues of shell-side Nusselt number. This may be explained as insmaller coil pitches,As in this region, the flow of shell-side fluid is decelerated.

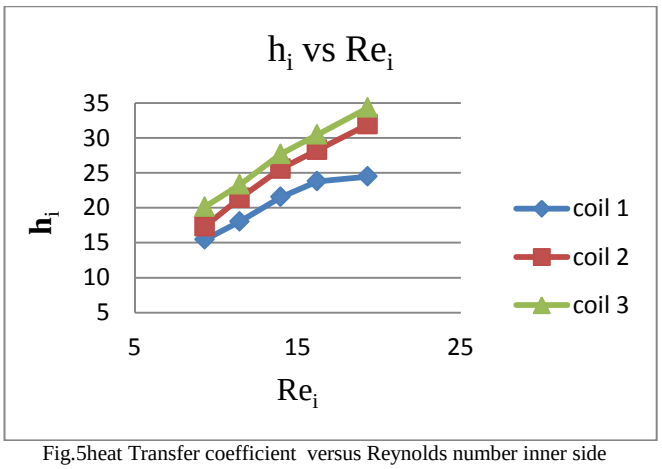

Fig.5heat Transfer coefficient versus Reynolds number inner side

Fig. 5represents the shell-side inner heat transfer coefficient increase with Reynold number .Also, it appears that the increase of coiled tube pitch leads to highervalues of shell-side Nusselt number. This may be explained as insmaller coil pitches,As in this region, the flow of shell-side fluid is decelerated.

VI.CONCLUSION

In this work, heat transfer from the hot water to cold water by using helical coiled tubes by varying the pitch of the coils are investigated experimentally for the heat recovery system. The comparative study made for the same boundary conditions and convective surface area of coil. The heat transfer analysis made in the laminar flow region. From the result of the present study, it was found that the tube side heat transfer coefficients of the greater pitch shows higher value of heat transfer coefficient. The experiments data were used to determine Nusselt number of inside the coiled tube with for different pitch. It was observed that the overall heat-transfer coefficient increases with increase in the coil side Reynolds number for a constant flow rate inside the shell. The result shows that heat transfer is more for the higher pitched coil.

REFRENCES

[1] Salimpour M. R. Heat transfer Coefficients of shell and coiled tube heat exchangers, Experimental Thermal and Fluid science, 2009, 33, pp. 203-207.

[2] Shokouhmand H., M.R. Salimpour, Akhavan-Behabadi M.A. , Experimental investigation of shell and coiled tube heat exchangers using wilson plots, international Communications in Heat and Mass Transfer, 2008, 35, pp. 84 92.

[3] Heat Transfer Coefficients for Particulate Airflow in Shell and Coiled Tube Heat Exchangers W. Witchayanuwat and S. Kheawhom World Academy of Science, Engineering and Technology 53 2009.

[4] Fundamentals of Heat Exchanger Design. Ramesh K. Shah and Dušan P. Sekulic.

[5] Some experimental studies on heat transfer augmentation for flow of liquid through circular tubes using twisted angles and tapes , Ranjit Gouda (10400015) & Amit Bikram Das (10400023), department of chemical engineering national institute of technology Rourkela, 2008

[6] Experimental Prediction of Heat Transfer Correlations in Heat Exchangers Tomasz Sobota Cracow University of Technology , Poland.

[7] Compact heat exchangers selection, design & operation, John E. Hesselgreaves, department of Mechanical and chemical Engineering, Heriot-Watt University, UK(2001)

[8] Heat exchangers selection rating and thermal design by Sadik Kakec, CRC press, Washington D. IEEE Std. 802.11, 1997.